Laser Speed Of Light/ Receiver Kit

Laser Energy In Application

An Application-Oriented Activity Using a Laser to Measure the Speed of Light

- **For Technology Education**
- **For Applied Physics**
- **For Science Classes**

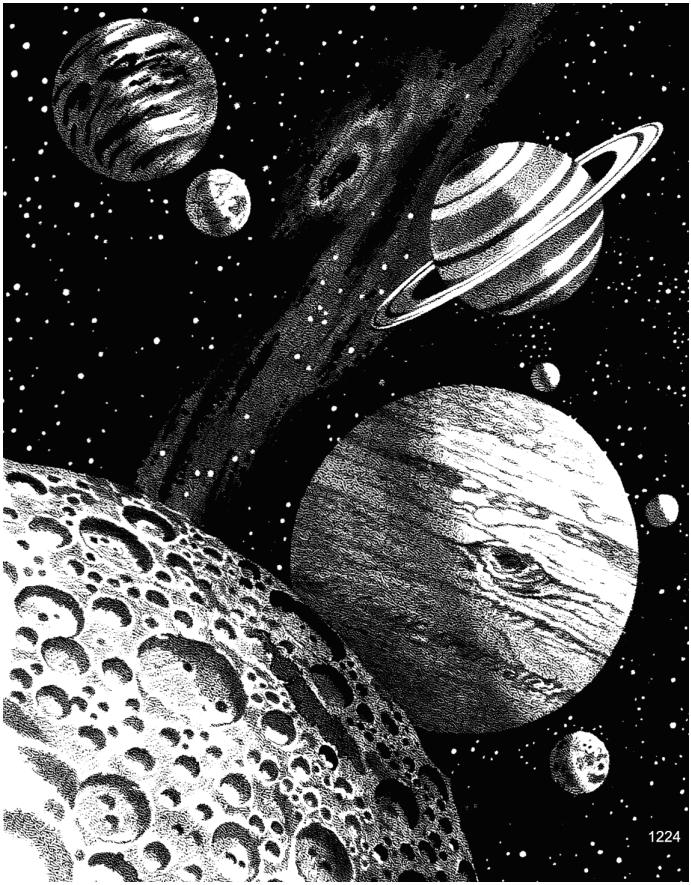

INDUSTRIAL FIBER OPTICS

*

Previous Printings 2016, 2015, 2013, 2010, 2006, 2002, 2001, 1999, 1997
By Industrial Fiber Optics, Inc.
Revision - I

Printed in the United States of America

* * *

* * * * *

INTRODUCTION

This manual is the master guide for Industrial Fiber Optics' Laser Speed of Light / Receiver Kit. This kit is designed to measure the speed of light using a laser beam. Included in the manual is a complete parts list for the kit and an action-filled guide for completing the Laser Speed of Light Activity.

As soon as you receive this product, inspect it and the shipping container for damage. Before beginning assembly and use, check the contents of the kit against the list shown in the section entitled "Component Identification". If any damage or missing parts are found, immediately refer to the section of this manual entitled "Shipment Damage and Missing Parts Claims".

Industrial Fiber Optics makes every effort to incorporate state-of-the-art technology, highest quality and dependability in its products. We constantly explore new ideas and products to best serve the rapidly expanding needs of industry and education. We encourage comments that you may have about our products, and we welcome the opportunity to discuss new ideas that may better serve your needs. For more information about our company and complete listing of products refer to ***www.i-fiberoptics.com****.*

Thank you for selecting this Industrial Fiber Optics product. We hope it meets your expectations and provides many hours of productive activity–.

Sincerely,

The Industrial Fiber Optics Team

LASER CLASSIFICATIONS

All manufacturers of lasers used in the United States, must conform to regulations administered by the Center for Devices and Radiological Health (CDRH), a branch of the U.S. Department of Health and Human Services. CDRH categorizes lasers as follows:

Class	Description
I	A laser or laser system which does not present a hazard to skin or eyes for any wavelength or exposure time. Exposure varies with wavelength. For ultraviolet, .2 to .4 µm exposure is less than from .8 nW to .8 µW. Visible light exposure varies from .4 µW to 200 µW, and for near IR, the exposure is < 200 µW. Consult CDRH regulations for specific information.
II	Any visible laser with an output less than 1 mW of power. Warning label requirements — yellow caution label stating maximum output of 1 mW. Generally used as classroom lab lasers, supermarket scanners and laser pointers.
IIIa	Any visible laser with an output over 1 mW of power with a maximum output of 5 mW of power. Warning label requirements — red danger label stating maximum output of 5 mW. Also used as classroom lab lasers, in holography, laser pointers, leveling instruments, measuring devices and alignment equipment.
IIIb	Any laser with an output over 5 mW of power with a maximum output of 500 mW of power and all invisible lasers with an output up to 400 mW. Warning label requirements — red danger label stating maximum output. These lasers also require a key switch for operation and a 3.5-second delay when the laser is turned on. Used in many of the same applications as the Class IIIa when more power is required.
IV	Any laser with an output over 500 mW of power. Warning label requirements — red danger label stating maximum output. These lasers are primarily used in industrial applications such as tooling, machining, cutting and welding. Most medical laser applications also require these high-powered lasers.

TABLE OF CONTENTS

COMPONENT IDENTIFICATION

Before assembly or use of this kit, please take a moment to compare its contents with the component list in Table 1. If any discrepancies are found, please refer to the section entitled "**SHIPMENT DAMAGE AND MISSING PARTS CLAIMS**".

Table 1. Speed of Light / Receiver Kit Component List.

General Description	Part Number	Quantity
Universal Laser Receiver	IF ULR	1
Universal Laser Receiver Operator's Manual	12 0205	1
110 VAC-to-12 VDC power adapter	580015	1
Small optics table	420086	1
Magnetic optics mounts	IF-LSL-RP2	4
Laser beam stop	IF-LBS3	1
Beam splitter (50% transmission)	830009	1
Mirror 5 x 7.3 cm (2 x 2.8 inch)	830045	2
Lens, 100 mm (4 inch) focal length	830050	1
Coaxial cable, BNC to banana	IF-510-RP5	1
Magnetic tape, 25 mm (1 inch) wide	250015	71 cm (28 in)
Laser Speed of Light Kit Instruction Manual	12 0200	1
Storage case	350275	1
Banana-to-test point adapter, red	IF-LSL-RP10	2
Banana-to-test point adapter, black	IF-LSL-RP11	2
Clip, binder	IF-250010	1
BNC to RCA Electrical adapter	550021	1

1 Not included in the *Laser Speed of Light* kit. See page 2 for more details

SUPPLEMENTAL EQUIPMENT

Completion of the *Laser Speed of Light Activity* requires several items that are not included in this kit. These items are listed below, including model number, specifications or general information to aid you in selection.

Laser

This kit was designed for use with the *Industrial Fiber Optics* laser models designated IF-VL08-635 and IF-VL30-635, but other lasers can be used, including the Scientific Laser Connection SLC 2.5mW Video Laser. In all cases it is required that the laser produce a visible light beam.

Oscilloscope

This instrument and its connecting measurement probes are critical to making accurate measurements in the *Laser Speed of Light Activity*. The oscilloscope must have dual trace capabilities and an electrical bandwidth rating of 40 MHz or more. If you are using a digital sampling oscilloscope, we suggest one with a bandwidth rating of greater than 80 MHz. All oscilloscope probes should have a bandwidth in excess of 40 MHz; have been recently calibrated; and be in good working condition. Very often a good oscilloscope can produce inaccurate results due to poor or damaged probes.

Isopropyl Alcohol

A common cleaning liquid available in most chemistry labs, retail drug stores and markets. In this activity it is used to clean the lenses, mirrors and beam splitter.

SAFETY

Optical

Handle the mirrors, lenses and beam splitter with care. These elements are glass and will break if dropped or not handled carefully. If one of these components does break, notify your instructor or administrator immediately. **Do not** pick up the broken glass with your hands. Use a small broom with a dust pan and discard the broken glass in a hazardous waste container, or as advised by your instructor.

Do not poke your fingers or any other objects through the access holes or electrical connections on the Universal Laser Receiver or laser.

Any laser should be used with caution, because the beam can be focused to an extremely powerful pinpoint of radiant energy. When aligning the laser with the laser receiver **never** look directly into the laser beam or stare at its bright reflections — just as you should avoid staring at the sun or other very bright light sources. Stand over or back from the laser when aligning it, keeping at least 40 cm (15 inches) between your body and the equipment.

If this is your first experience using a laser, review the *Rules for Laser Safety* on the back cover of this booklet.

If in question about the safety of your laser, contact the laser manufacturer; your local U.S. Department of Health, Education and Welfare office; or write to that agency's headquarters at 1390 Piccard Dr., Rockville, MD 20850.

Electrical

Included in this kit for use with the Universal Laser Receiver is a UL-approved 60 Hz 110 VAC-to-12 VDC (50 Hz 220 VAC-to-12 VDC) adapter for VAC operation. The adapter converts common lab/household voltage to low DC voltage suitable for the laser receiver's use. Always plug the adapter into a grounded circuit.

The Universal Laser Receiver is particularly safe because it operates at low voltage and low current levels. However, as when using any electrical device, you must take certain safety precautions:

- Do not touch (or short-circuit) the electrical connection points on the adapter, as this could damage the power adapter.
- Do not open the Universal Laser Receiver housing or remove any of the screws under any circumstances, as this will expose you to unshielded electrical connections and void the product warranty.

BACKGROUND INFORMATION

The miracles of modern-day technology didn't simply show up on someone's doorstep. Centuries of curiosity, experimentation, frustration and perspiration passed before pure science won out over superstition and guesswork. A small Italian gentleman was among the first to seek enlightenment about the speed of light . . . .

The Speed of Light — A Centuries-Long Quest

Scientists, and probably even more casual thinkers, began speculating about the speed of light centuries ago. When you consider that early civilizations often made gods and goddesses out of suns, planets and moons, it isn't hard to understand their fascination and wonder about one of the most powerful forms of energy in their world.

One of the first that we know of to ask himself, "Hmmm....wonder how fast that stuff travels?" was Galileo, Italian astronomer and physicist....the same fellow who dropped objects off the now-Leaning Tower of Pisa trying to calculate how fast they fell.

Galileo scored with the tower business, in calculating the fall rates of items as varied as feathers and cannonballs. Light was another matter, however, and he knew he had to attempt his measurements of light speed over a much greater distance if he hoped to get a whatever-per-second grip on that speeding luminous energy.

He decided that hilltop-to-hilltop was a good starting point, and that's where he began, with himself on one hill and his trusty assistant on another, well after the sun had set. Each man carried an oil-burning lamp with a cover, so the light could be shielded from view until needed.

Galileo uncovered his lamp briefly, sending a flash of light over to his assistant. The assistant replied, with his own quick flash of light back to the boss. The exchanges continued that night, and many nights more, from hilltops increasingly further apart.

Galileo had hoped to measure the time which elapsed from the moment the lamp shields were uncovered until the light was perceived by his eye. Rotten luck. He finally decided (rightfully) that he and his assistant weren't physically up to the challenge of grappling with the speed of light. (Incorrectly) he determined that light travels at infinite speed.

Figure 1. Galileo Galilei (1564-1642)

The first real estimate of the speed of light was made in 1675 by a Danish astronomer, Ole Roemer. Roemer had been watching the movement of Jupiter's moons, and he noticed that the times they appeared and vanished seem to vary though out the year. He guessed that this was because the distance from the earth to Jupiter changed during a yearly cycle, and that so did the distance that the light had to travel. By some simple mathematics, Roemer estimated the speed of light to be about 137,000 miles (220,000 km) per second.

The next recorded method of measuring light was that of Frenchman Armande H. L. Fizeau (1819-1896) in 1849. Try to visualize his elaborate, apparently unwieldy array of mirrors, lenses, and a huge rotating cogwheel with 720 teeth, designed to measure the speed of light over a distance of 5.39, count 'em, miles.

But the thing worked. Pretty much. Fizeau and his apparatus computed light speed at 194,000 miles per second. Not bad, when you consider the crude scientific tools available at that time, plus the difficulty of the experiment.

In the years that followed, investigators steadily improved on Fizeau's equipment and methods of observation. Most notable was the work of American physicist Albert Michelson (1852-1931) who replaced Fizeau's 720-tooth wheel with an eight-sided mirror. (He also increased the measurement distance to 44 miles.)

In 1926 Michelson got a grip on light, computed at 299,796 kilometers per second—or 186,284 miles per second.

The quest for precision, and continued refinement of the measurement, continued until, today, really only hard-core mathematicians quibble about the number of decimal places we should assign to the speed of light.

Figure 2. Liftoff of STS-34 Atlantis, carrying the Galileo spacecraft. Galileo was the first satellite to send pictures of Jupiter's atmosphere, surface and surrounding moons back to earth.

Speed Traps Occur When Light Meets Matter

The speed of light in a vacuum is now officially listed as 299,792.4562 kilometers per second. For the purposes of everyday discussion we generally suffice with a figure of 300 million meters per second, or 186,000 miles per second.

In the paragraph above, we specified the speed of light traveling when through a vacuum, such as outer space. One may ask the question, "Is the speed of light the same in a vacuum as in air?" In the days of Fizeau, not to mention Galileo, it seemed to be. Since then we have learned that light slows down when it passes through some medium other than a vacuum (such as a gas, solid, or liquid). But often not by much. For example:

- At sea level, light speed through air is about 70 kilometers less per second than it is in a vacuum. (At higher altitudes, where the air is less dense, and where light is impeded less by solid airborne particles, light speed increases.) For most practical purposes we can say that light speed in air vs. light speed in a vacuum is the same.

- In water, however, things get relatively sluggish. The speed of light is about 25 percent less than in a vacuum.

- In glass, light has even a tougher time. Its speed drops by about 33 percent, compared to its rate of travel in a vacuum.

Table 2. Metric Prefixes and Their Meanings.

Prefix	Symbol	Multiple
tera	T	10^{12} (trillion)
giga	G	10^{9} (billion)
mega	M	10^{6} (million)
kilo	k	10^{3} (thousand
hecto	h	10^{2} (hundred
deca	da	10^{1} (ten)
deci	d	10^{-1} (tenth)
centi	c	10^{-2} (hundredth)
milli	m	10^{-3} (thousandth)
micro	µ	10^{-6} (millionth)
nano	n	10^{-9} (billionth)
pico	p	10^{-12}(trillionth)
femto	f	10^{-15} (quadrillionth)

Refractive Index

When scientists discover a new phenomenon they often seek to describe it mathematically. In the case of the speed of light through any material, they relate it to the speed of light in a vacuum by the term "refractive index" (or "index of refraction"). Refractive index, n, is the ratio between the speed of light in a vacuum to its speed in some other medium.

Or, in scientific symbolic terms:

$$n_i = \frac{Speed\ of\ light\ in\ vacuum}{Speed\ of\ light\ in\ another\ medium}$$

$$n_i = \frac{c}{v}$$

You'll soon measure the speed of light with accuracy that would have astounded those well-intentioned early experimenters with their lamps, cogwheels and mirrors.

Table 3. Refractive Indices of Various Common Materials.

Material	Value
Air	1.00029
Water	1.33
Glass, window	≈ 1.5
Glass, lens	1.4 to 1.7
Silicon	3.5
Plastic	1.47 - 1.6
Diamond	2.4

SPEED OF LIGHT ACTIVITY

Because light can travel about seven and one-half times around the earth in one second, measurements of the speed of light in the typical student laboratory have been very difficult. Now, with the advent of low-cost lasers and high-frequency photodetectors, students can make measurements that rival those of Fizeau and Michelson.

The most accurate methods for speed of light measurements generally involve the use of a well collimated beam of light. Collimated light consists of parallel rays which do not lose their intensity, or diverge, with distance. Rays from conventional sources do not originate from a single point, and thus are difficult to collimate. On the other hand, a laser emits a light beam that is already fairly well collimated and can be collimated even further using very simple optics. Therefore, a laser is the preferred choice for the light source in a speed of light measurement, and it will be used in this activity.

Michelson and Fizeau pulsed their light beams using external devices such as rotating blades or mirrors. External devices equivalent to these can be used with a laser, but are cumbersome to set up, not very satisfying for the student to operate, and expensive. In this activity we shall use the capabilities of many modern lasers that allow pulsing, or modulation, of the laser beam by supplying appropriate signals to a specific input jack on the laser.

General Description	
Modulated laser*	Universal Laser Receiver
110 VAC to 12 VDC power adapter	Magnetic tape 1 inch wide
Beam splitter	Metal optic holders (4)
Optics table	Mirrors (2)
Banana plug test point adapter, black (2)	Banana plugs test point adapter, red (2)
100 cm focal length plano-convex lens	Binder clip
Measuring tape (25-foot tape suggested)*	Bench or table*
Isopropyl alcohol*	Cotton cloth*
Single-edge razor blade*	Scissors*
Dual-channel 40 MHz oscilloscope*	120 VAC power*

* Not included in the *Laser Speed of Light* kit.

Assembly Instructions

If you have not identified all of the components in the required list on the preceding page, please refer to the section entitled **"Component Identification"** before proceeding. If this kit has been used before, you can proceed to step 13 on the following page.)

1. With scissors, cut the magnetic strip into four 5.7 mm (2.25 inch); seven 4 cm (1.5 inch); and six 1.3 cm (.5 inch) pieces.

2. Before applying the magnetic pieces to any item, clean the designated areas with a cotton cloth wet with isopropyl alcohol, to remove any grease and oil.

3. Remove the protective backing (the white wax-like paper) on the back of a 4 cm (1.5 inch) magnetic strip and place the strip adhesive-side-down on the front end of the laser bottom, crosswise to the direction of the laser beam path. (The front of the laser is the end from which the light beam exits.) Repeat with two more 4 cm (1.5 inch) magnetic strips, placing them about 5 cm (2 inches) apart.

4. Remove the protective backing from a 4 cm (1.5 inch) magnetic piece and place the strip adhesive-side-down in one corner of the laser receiver bottom about 2.5 cm (1 inch) from the edge. Repeat with three more 4 cm (1.5 inch) magnetic strips, placing each piece in a different corner on the receiver's bottom. (If you are using a Metrologic receiver you may find it necessary to remove the rubber feet on the receiver's underside because they are rather thick.)

5. Remove the protective strip from the back of a 5.7 cm (2.25 inch) magnetic piece and position the piece on the bottom of an optics mount. (The bottom is the narrowest portion of the right-angle mount.) Repeat for the remaining optics mounts.

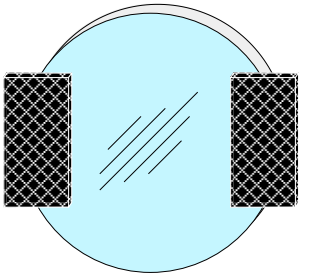

Figure 3. Positioning of magnetic strips on the lens.

6. Two 1.3 cm (.5 inch) magnetic pieces are to be positioned on the flat side of the plano-convex lens as shown in Figure 3. Remove the protective backing from a 1.3 cm (.5 inch) magnetic piece and place the piece at either the right or the left position. Remove the protective backing from another 1.3 cm (.5 inch) magnetic piece and place that piece at the opposite position on the lens.

7. Remove the protective backing from a 1.3 cm (.5 inch) magnetic piece and place the piece adhesive-side-down on the non-chromed or silvery side of the beam splitter.

8. With a single-edge razor blade cut through the protective blue sheeting on the front of the other 5 x 7.5 cm (2 x 3 inch) mirror as shown by the dashed line in **Figure 4**.

9. Remove the bottom half of the protective sheeting from the front of this mirror.

10. Remove all the items from the bag containing the laser beam stop. With the two screws and nuts provided, fasten the cardboard upright on the acrylic base.

11. Insert the plastic thumb screw into the threaded insert in the base and turn until its screw tip is even with the bottom of the acrylic.

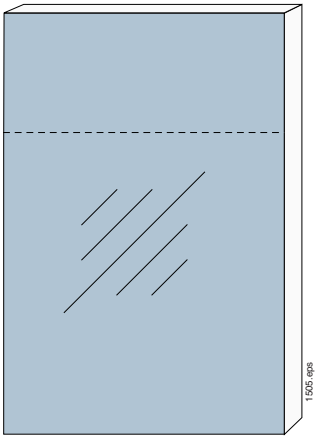

Figure 4. Mirror ready for mounting on the beam stop, showing the portion of the protective sheeting to remain on the mirror for protection form the binder clip.

12. With the binder clip, attach this mirror to the upright on the laser beam stop at about the half-way position, with the mirror opposite the thumb screw. Remove the protective sheeting from the lower portion, as shown in **Figure 4**, of the mirror's front surface. The remaining portion of protective sheeting should be left on to protect the surface from the binder clip.

At this point all of your equipment should be assembled and ready to place in position.

Equipment Positioning

In the following procedure use the white markings on top of the optics table and Figure 5 to aid in proper positioning of components. We recommend that two or more people set up this experiment, to aid in the critical positioning of the mirrors and lenses. Examine the mirror, beam splitter and lens for cleanliness. If they have fingerprints, dust or other grime on them, go to the section entitled "**Cleaning and Maintenance**" for instructions.

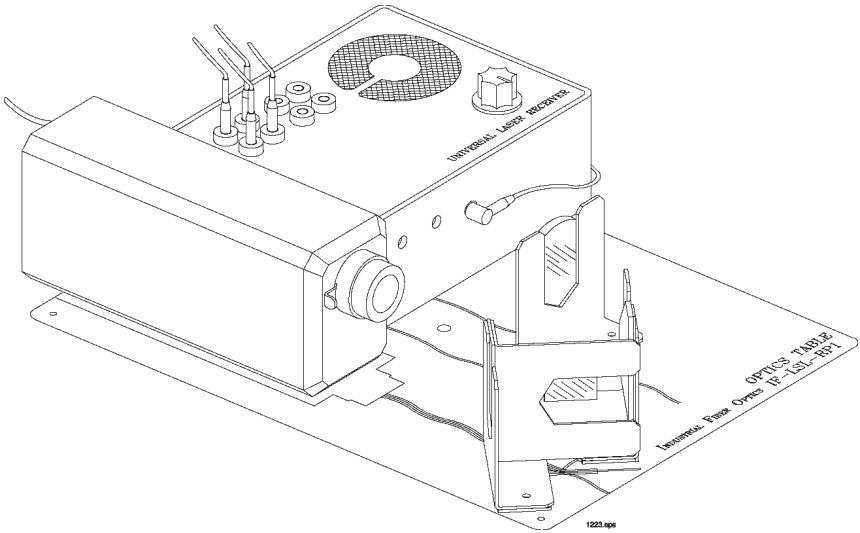

Figure 5. Proper Positioning of Equipment for the Laser Speed of Light - Activity.

1. To begin, select a room that extends at least 10 meters from corner to corner. Move a bench or table to one corner of the room.

2. Place the optics table, with the white lettering up, on top of the desk or table.

3. Place the laser on the optics table and align it so the laser chassis conforms to the area outlined in white for the laser on the optics table.

4. Place the laser receiver in its designated area on the optics table.

5. Make sure that the laser attached to the optics table is pointed in a safe direction, the laser's ON/OFF switch is in the OFF position and the laser's beam stop is in the closed position.

6. Plug the 110 VAC (220) VAC plug on the end of the laser power cord into a 110 (220) VAC wall outlet.

7. Move the laser ON/OFF switch until it clicks into the ON position.

8. The laser's pilot light should now be lit, indicating that power is being delivered to the laser.

9. Move the laser's beam stop shutter to its open position.

10. Observe the red light beam striking the wall, or other surface, in the direction which the laser is pointed.

11. Push the beam shutter to its closed position, and turn the laser off. (The pilot light is no longer illuminated.)

12. Plug the 110 (220) VAC-to-12 VDC power adapter (provided with the receiver) into a 110 (220) VAC wall outlet.

13. Plug the 2.1 mm plug on the end of the power adapter cord into the hole on the laser receiver designated for the power jack.

14. Arrange the power adapter cord so it will not visibly interfere with the receiver's access hole for **Photodetector #1** or **Photodetector #2**.

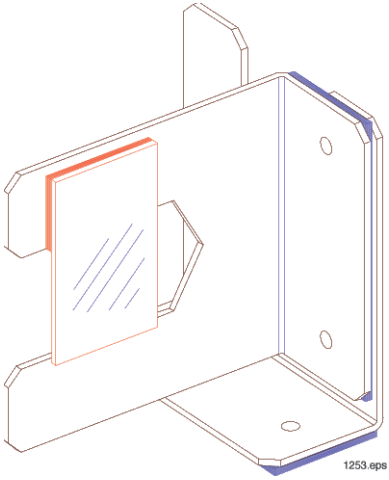

Figure 6. Proper mounting of two optics mounts with beam splitter installed for splitting the laser beam into two portions

15. Insert one red banana plug on the end of the coaxial cable into the Universal Laser Receiver's red banana jack marked "LASER".

16. Insert the other black banana plug on the end of the coaxial cable into the Universal Laser Receiver's black banana jack marked "LASER".

17. Connect the other end of the coaxial cable to the laser's BNC input. (If using the Industrial Fiber Optics' Laser use the BNC to RCA adapter to connect to the white "ANALOG IN" RCA jack.)

18. Attach two universal optics mounts and the beam splitter as shown in **Figure 6**. Place this assembly on the optics table using the white outline for positioning.

19. Magnetically fasten the remaining mirror to the upright portion of an optics mount. Then position the assembly onto the optics table using the table's white outline.

20. Magnetically fasten the lens to the optics mount and then onto the optics table, again using the outline to help in initial positioning.

Aligning the Optics

The following steps explain the procedure for aligning all of the optical elements needed to complete the "Speed of Light" measurement. Please follow each step in order, to make this tricky alignment as easy as possible.

1. Move the laser ON/OFF switch to the on position, and open the laser beam shutter.

2. At this point you should be able to observe that the beam splitter divides the laser beam into two segments. One, which passes through the beam splitter (transmission portion), will be our measuring beam. The other, which is reflected over to the mirror located on the optics table and then onto the laser receiver, will be our reference beam.

3. Set the laser beam stop with attached mirror on another desk or table in the opposite corner from the laser as far as the room will allow. Align the optics table and the laser beam stop so the laser beam hits the mirror or very close to it. Exact alignment of the laser beam and this mirror is not necessary because it may change slightly after you align the reference beam.

4. Adjust the beam splitter's and the mirror's optics mounts located on the optics table so that the reference laser beam is centered on **Photodetector # 2** of the laser receiver.

5. Measure the length of the reference laser beam, starting from the beam splitter, reflecting off the mirror and onto **Photodetector #2**. This distance will be called $\mathbf{l_1}$, and will be used later.

6. Now the measurement beam must be reflected back to the detector control box. Cross the room to the laser beam stop located in the opposite corner. Adjust the mirror and beam stop so the laser beam strikes the center of the mirror.

7. With some patience (and a steady hand), adjust the beam stop so the reflected beam strikes the center of the lens mounted on the optics table. Make vertical adjustments with the thumb screw at the back of the beam stop. Make horizontal adjustments by rotating the beam stop.

8. The return beam from the mirror will have a considerably larger diameter than that of the reference beam. Slide the lens back and forth until the beam is directed precisely into the receiver's channel 1 photodetector hole. It may be necessary to move the lens up and down on the optics holder to adjust the vertical focusing of the laser beam. Move the lens directly forward and backward to focus the laser beam to as small a spot as possible onto **Photodetector #1**. Optimal focus should be approximately 10 cm (4 inches) from the detector. It may be necessary to adjust the direction of the laser beam slightly at the laser beam stop during this adjustment.

9. This long leg of the split beam will be the measuring beam. Measure the distance from the laser beam splitter to the reflecting mirror and back to **Photodetector #1**. This will be called $\mathbf{l_2}$.

10. Go back and check all of the lens, mirror and beam splitter mountings for steadiness and proper positioning.

Test Equipment Setup

1. Turn on the oscilloscope.

2. On the oscilloscope make the following settings:
   - Set the horizontal Mode switch on A
   - Set triggering Mode to Auto
   - Set the Trigger Source Switch on Channel 1
   - Set the Trigger on positive slope
   - Set the variable Volt/Div. Control of input Channel 1 to .2 volt per division
   - Set the variable Volt/Div. Control of input Channel 2 to .2 volt per division
   - Set the input coupling of both channels on AC
   - Set the Timebase on .1 microseconds per division

3. Insert the red banana-to-test point adapters into the receiver's Channel #1 and Channel #2 red banana jacks. Insert the black banana-to-test point adapters into the receiver's Channel #1 and Channel #2 black banana jacks. Be careful not to move the laser receiver.

4. Connect Channel 1's oscilloscope probe to the red banana-to-test point adapter of Channel #1 and its ground connection to Channel #1's black banana-to-test point adapter.

5. Connect Channel 2's oscilloscope probe to the red banana-to-test point adapter of channel #2 and its ground connection to channel #2's black banana-to-test point adapter.

6. On the oscilloscope turn the Horizontal Display positioning knob so the oscilloscope traces are located in the center of the CRT (cathode ray tube) screen.

7. Move the laser receiver ON/OFF switch until it clicks on.

The Measurement!

At this point you should see two signals on the oscilloscope screen as shown in **Figure 7**. Both signals should have an approximate frequency of 1 MHz and an amplitude of 1 to 2 volts peak-to-peak.

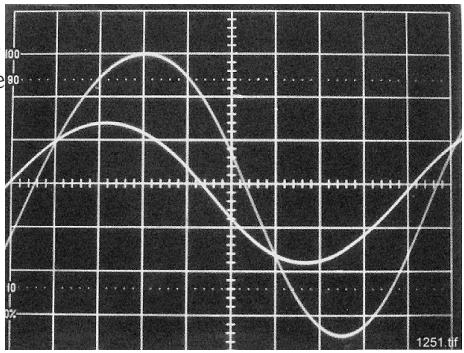

Figure 7. Oscilloscope screen showing receiver's signals from the reference and measurement laser beams.

1. Located in the very center of each channel's vertical amplitude adjustment knob is a variable amplitude knob. For most applications this knob is turned and locked into the calibrated state. Using one of these knobs, adjust until both signals are equal in size or amplitude on the oscilloscope display.

2. Using the vertical and horizontal position control knobs, align the reference sine wave (Channel #1) so it intersects the crossing point for the center horizontal and vertical grid as shown in **Figure 8**.

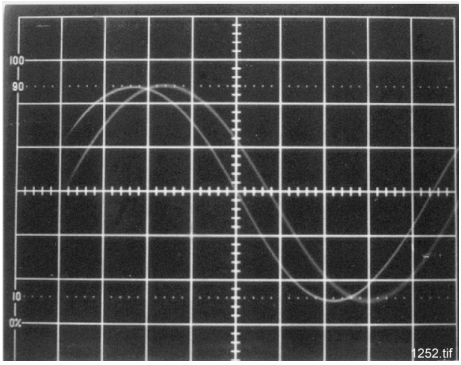

Figure 8. Oscilloscope screen with receiver's signals calibrated and positioned for measuring the time (phase) difference between the reference and measurement laser beams.

3. Observe that Channel #2 is delayed and to the right of Channel 1's signal.

4. Carefully measure the time difference between the reference sine wave (Channel #1) and the delayed sine wave (receiver Channel #2), in nanoseconds. Measure the distance, or time, from where both signals' positive slope passes through the center horizontal axis, as seen in **Figure 8**. This measurement will be ***t***, which will be used in the next segment of this activity.

Speed of Light Calculation

We now have all the information we need to calculate the speed of light.

As you will recall (or at least, we hope you recall, heh, heh) from your science or physics classes.

$$v = \frac{\Delta d}{t}$$

$$where\ t\ is\ time\ and\ \Delta d\ will\ be\ l_2 - l_1.$$

"Ahhh," you're probably saying to yourself, "It's all coming back to me now." Sure.

Now take the measurement distance and time you measured previously and substitute it into this equation. (If your measurements are in feet, you should convert to metric, or your answer will be in feet / second.)

$$v = \frac{l_2 - l_1}{t}$$

$$v = \frac{20.2 - .2}{6.7 \times 10^{-8}}$$

$$v = 298{,}507{,}462\ meters\ /\ second$$

In other words—approximately the speed of light.

If we now compensate the velocity as measured in air for its known refractive index from **Table 2**.

$$c = n_i \cdot v$$

$$c = 1.00029 \cdot 296{,}296{,}296$$

$$c = 296{,}382{,}222\ meters\ /\ second$$

Just to make sure you understand why you should feel proud about yourself (rightfully so) for having arrived at the right numbers, run back through the preceding **Background Information** sections and review the history of light speed measurements.

A Little Extra

If you would like to further verify your measurements, you can set the laser beam stop and mirror at a different distance and repeat alignment and measurements. If you would like to use this equipment as a laser range finder, measure the time delay between the reference beam and the measuring beam, and the equation

$$d = v \bullet t$$

Conclusion

If you think back to people's initial curiosity about the speed of light, more than 500 years ago, you probably can appreciate how far that curiosity — and determination, and scientific dedication, and sudden inspiration — have changed our world. The demonstration you completed so simply with your *Speed of Light Kit* was founded upon the endless questions and, eventually, scientific explorations, of thousands of adventurous people who dared to ask: "Why?"

TROUBLE SHOOTING

No Traces Displayed on the Oscilloscope Screen

- Verify that the oscilloscope trigger mode is set to AUTO.
- Determine if there is power to the oscilloscope and that it is turned on.
- Check the oscilloscope's vertical and horizontal position control of Channel # 1 and Channel #2.
- Adjust the triggering level on the oscilloscope.
- Adjust the oscilloscope's intensity control and focus.
- Change the Oscilloscope Trigger Coupling to another setting such as DC or HFrej.

Oscilloscope Screen Displays Only One Trace

- Adjust Channel #1 and Channel #2 vertical positions on the oscilloscope.
- AC-GND-DC input coupling switch on one channel is set to DC. Check to determine if both are set to the AC position and check that the variable vertical controls are at .2 volt/division.
- Vertical Mode Switch is set to display only one channel. Set to the position labeled ALT.

Oscilloscope Screen Shows Only Lines

- AC-GND-DC input coupling switches are set to ground or to DC. Set to AC and check that both the variable vertical controls are set at .2 volt/division.
- Some oscilloscope probes have a switch near the tip to ground them, for calibration. Check both probe tips for such a switch and act accordingly.
- Oscilloscope probes, or their grounds, are not electrically connected to input of the Universal Laser Receiver or to the oscilloscope. Connect any lead as required.
- Possibility of a bad probe. Check probes by connecting them to the oscilloscope's calibration signal. See oscilloscope manual for location and procedure.
- Universal Laser Receiver is not electrically connected to the laser, so no modulation of the laser beam is occurring. Check banana and BNC connections on the connecting cable.
- Check to see if the laser beams are illuminating the Universal Laser Receiver's detectors.

- Is the laser on and the beam stop in the open position?
- Electrical cable between the Universal Laser Receiver and laser is faulty. Use an alternate cable or contact a distributor or Industrial Fiber Optics for replacement cable.
- Determine if the power adapter for the laser receiver is plugged into a 110 VAC outlet, into the laser receiver and is turned on.
- Verify the 110 VAC line power.

Only One Sine wave Signal Can be Seen on the Oscilloscope Screen

- AC-GND-DC input coupling switches on one channel are set to ground or to DC. Set to AC and check that the variable voltage control is at .2 volt/division.
- One oscilloscope probe is not electrically connected to the Universal Laser Receiver or the oscilloscope. Check probes' ground connection also.
- Lenses, beam splitter and mirrors are not properly aligned, dirty or being obstructed so only one of the detectors on the Universal Laser Receiver is picking up the laser beam.
- Improper time base setting. Set to .1 microseconds per division.
- Is the focusing lens distanced properly so that the laser beam is focused to a fine point and striking Photodetector #1 of the laser receiver?
- One of the oscilloscope probes is damaged. Check by using the calibration procedure found in the oscilloscope operator's manual.

If you are not successful with the experiment at this point, do not attempt to trouble shoot the laser or the laser receiver by taking them apart. If you believe that a problem exists within the laser receiver or the components furnished in the *Laser Speed of Light Activity*, please either contact the factory or return components for appropriate servicing to Industrial Fiber Optics, as described in the section titled "Cleaning and Maintenance".

CLEANING AND MAINTENANCE

None of the items contained in this kit require periodic cleaning or maintenance, with the exception of the lenses and mirrors. (See the Universal Laser Receiver Operator's manual for service and maintenance of the laser receiver.)

The beam splitter and front surface mirrors are coated with a fragile coating that is very easily scratched. The best way to clean the mirrors is to hold them with the reflective surface downward in a shallow dish of isopropyl alcohol. Without permitting the mirror to touch the bottom of the dish, move the mirror back and forth in the alcohol until clean. An alternative is to pour alcohol over the mirror. If the mirror remains dirty, light rubbing with clean facial tissue should help to remove smudges.

The lenses and beam splitter are also most effectively cleaned in this fashion, using alcohol. After one side of the lens or beam splitter is clean, flip the lens to clean the other side.

In the unlikely event that any of the components in this kit malfunctions and you wish to have it repaired, please do the following:

- In a letter, describe the problem, person to contact, phone number, and return address.
- Pack the laser receiver, power adapter, manual, and letter carefully in a strong box with adequate packing material, to prevent damage in shipment
- Ship the package to

Industrial Fiber Optics
1725 West 1st Street
Tempe, AZ 85281-7622
USA

WARRANTY

Industrial Fiber Optics products are warranted against defects in materials and workmanship for one year. The warranty will be voided if any of the components have been damaged or mishandled by the buyer, including modification of components, entry to the receiver housing and/or removal of screws.

Industrial Fiber Optics' warranty liability is limited to repair or replacement of any defective unit at the company's facilities, and does not include attendant or consequential damages. Repair or replacement may be made only after failure analysis at the factory. Authorized warranty repairs are made at no charge, and are guaranteed for the balance of the original warranty.

Industrial Fiber Optics offers to pay the return freight for warranty repair within the continental United States by United Parcel Service. Any other delivery means must be paid for by the customer.

The costs of return shipments for items no longer under warranty must be paid by the customer. If an item is not under warranty, repairs will not be undertaken until the cost of such repairs has been approved, by the customer. Typical repair costs start at $65 and repairs usually take 1 to 2 weeks to complete.

When returning items for analysis and possible repair, please do the following:

In a letter, describe the problem, person to contact, phone number and return address. Contact us to request an RMA number.

- Pack the complete kit with your letter carefully in a strong box with adequate packing material to prevent damage in shipment.

- Ship the package with the assigned RMA number to:

Industrial Fiber Optics
1725 West 1st Street
Tempe, AZ 85281-7622

SHIPMENT DAMAGE AND MISSING PARTS CLAIMS

Shipment Damage

If damage to an *Industrial Fiber Optics* product should occur during shipping, it is imperative that it be reported immediately, both to the carrier and the distributor or salesperson from whom the item was purchased. DO NOT CONTACT INDUSTRIAL FIBER OPTICS.

Time is of the essence because damage claims submitted more than five days after delivery may not be honored by the carrier. If shipping damage has occurred during shipment, please do the following:

- Make a note of the carrier company; the name of the carrier employee; the date; and the time of the delivery.
- Keep all packing material.
- In writing, describe the nature of damage to the product.
- In the event of severe damage, do not attempt to assemble or use the product (including attaching it to a power source).
- Notify the carrier immediately of any damaged product.
- Notify the distributor from whom the purchase was made.

Missing Parts Claims

Industrial Fiber Optics products are warranted against missing parts for 90 days. If any components are missing please contact the distributor or salesperson from whom the kit was purchased. Refer to the component list in **Table 1** of this manual for part numbers when reporting claims.

Rules for Laser Safety

- Lasers produce a very intense beam of light. Treat them with respect. Most educational lasers have an output of less than 3 milliwatts, and will not harm the skin.
- Never look into the laser aperture while the laser is turned on! **PERMANENT EYE DAMAGE COULD RESULT.**
- Never stare into the oncoming beam. Never use magnifiers (such as binoculars or telescopes) to look at the beam as it travels – or when it strikes a surface.
- Never point a laser at anyone's eyes or face, no matter how far away they are.
- When using a laser in the classroom or laboratory, always use a beam stop, or project the beam to areas, which people won't enter or pass through.
- Never leave a laser unattended while it is turned on – and always unplug it when it's not actually being used.
- Remove all shiny objects from the area in which you will be working. This includes rings, watches, metal bands, tools, and glass. Reflections from the beam can be nearly as intense as the beam itself.
- Never disassemble or try to adjust the laser's internal components. Electric shock could result.